EN 64100443

V01

QUICK INSTALLATION GUIDE

Energy System (STORION-LC-TB125)

1. Product Overview

(1).BESS Explosion Vent
(2).Air Inlet
(3).Bottom Panel
(4).4G Antenna
(5).Lifting Ring
(6).Combined Aural and Visual Alarm
(7).Indicator
(8).EPO
(9).Grounding
(10).4G Antenna Cable Inlet
(11).System Identification Plat
(12).Sprinkler Inlet
(13).Battery
(14).Liquid Cooling Unit
(15).HV-BOX
(16).AC Moulded Case Circuit Breaker
(17).PCS
(18).EMS
(19).Auxiliary circuit breakers
(20).4G Antenna Installation location

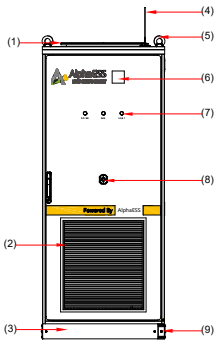

Front view

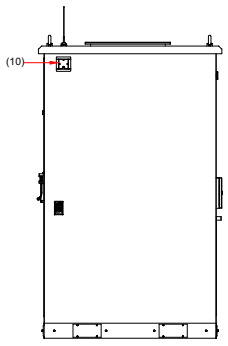

Right view

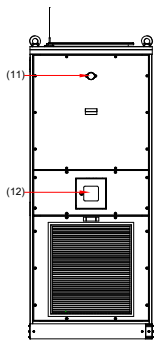

Back view

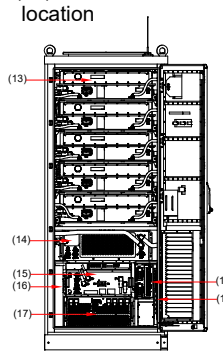

Internal Arrangement Diagram

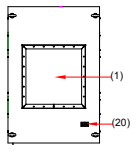

Top view

1.1 Packing List（Inside the Cabinet）

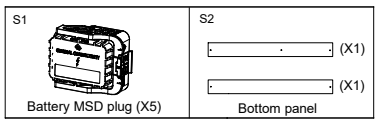

1.2 Packing List（Outside the Cabinet）

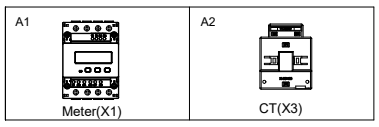

2.STS Cabinet Overview(optional)

(1).Auxiliary Circuit Breakers
(2).UPS
(3).PCS Connection Terminal
(4).STS Module
(5).Grid-side Molded Case Circuit Breaker
(6).Load-side Molded Case Circuit Breaker
(7).SPD
(8).Grounding Copper Bar
(9).N-phase Copper Bar
(10).Terminal Block

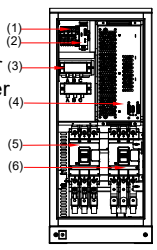

Front view

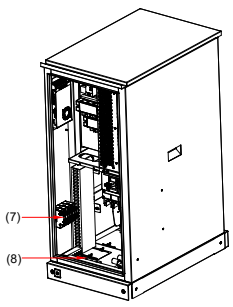

Internal Left view

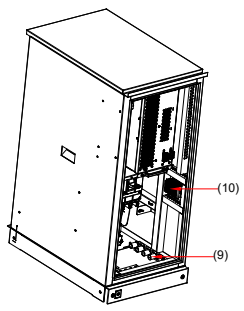

Internal Right view

3. Installation Tools

 Multimeter	 Insulation meter	 Diagonal pliers	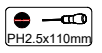 PH2.5x110mm PH2.5 Screwdriver	 Sleeve combination tools	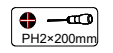 PH2×200mm PH2 Screwdriver
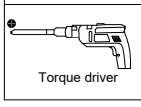 Torque driver	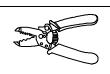 Wire Stripper	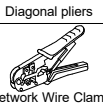 Network Wire Clamp	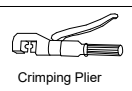 Crimping Plier	 Tape Measure	 Hammer drill

Note:The customer is responsible for supplying **fireproof putty**.

4. Installing the Product

4.1 Installation of grounding cable

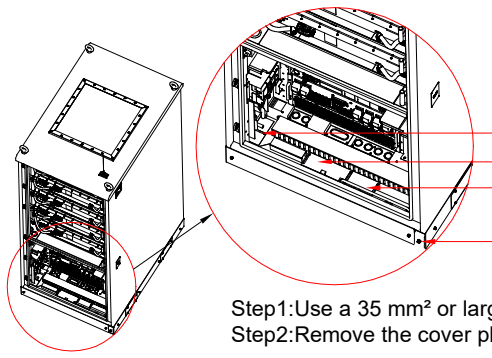

Step1:Use a 35 mm² or larger cable to ground the cabinet
Step2:Remove the cover plate of the AC input port

Note:After the cable installation is completed, use **fireproof putty** to seal the cable entry point.

4.2 Grid and meter connection

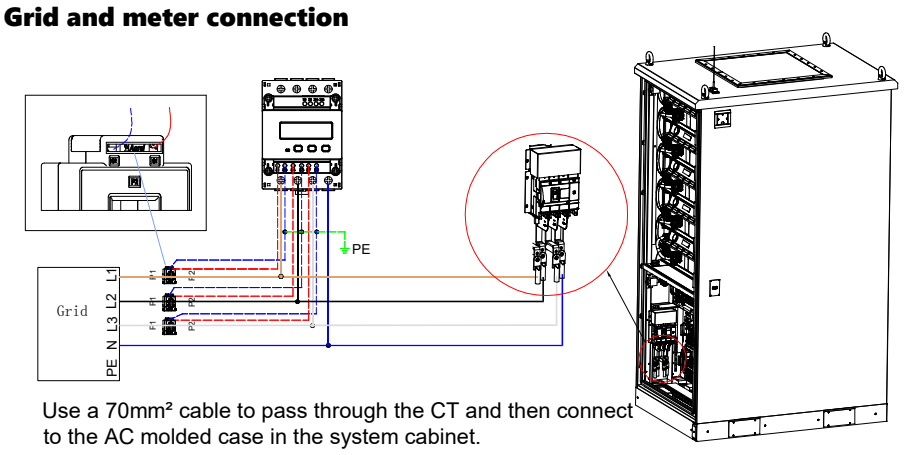

Use a 70mm² cable to pass through the CT and then connect to the AC molded case in the system cabinet.

4.3 Meter communication cable connection

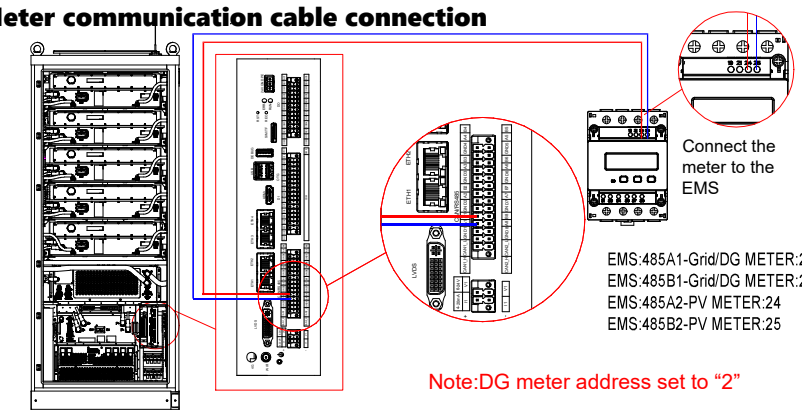

EMS:485A1-Grid/DG METER:24
EMS:485B1-Grid/DG METER:25
EMS:485A2-PV METER:24
EMS:485B2-PV METER:25

Note:DG meter address set to “2”

4.6 STS Cabinet to the Grid or DG connection

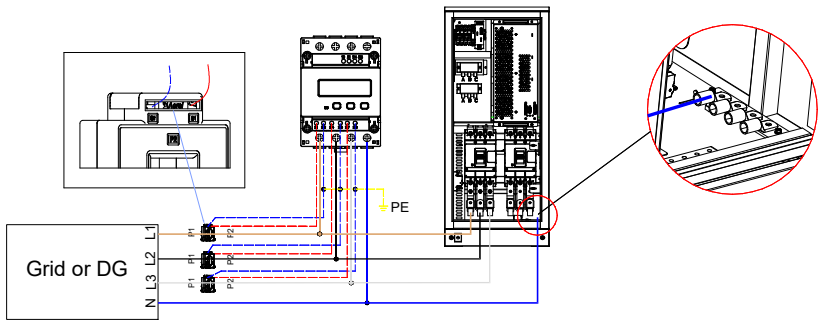

Note:Use an M10 Sleeve combination tools for installation.

4.4 System cabinet to STS cabinet power cable connection(STS cabinet optional)

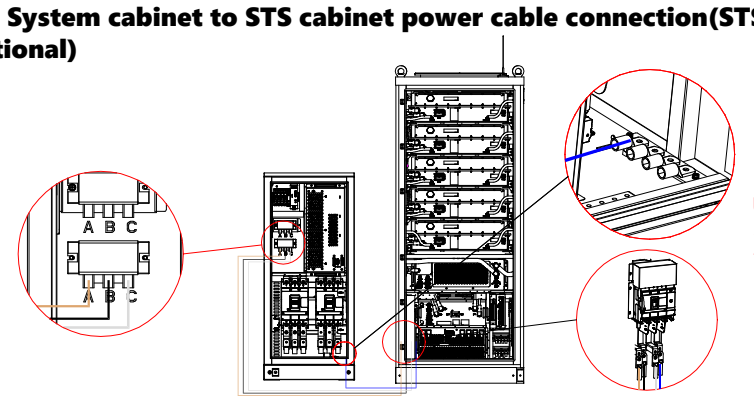

Use an M10 or M8 Sleeve combination tools for installation.

Note:Given that an STS cabinet has been selected and configured on site

4.7 System to DG communication cabling

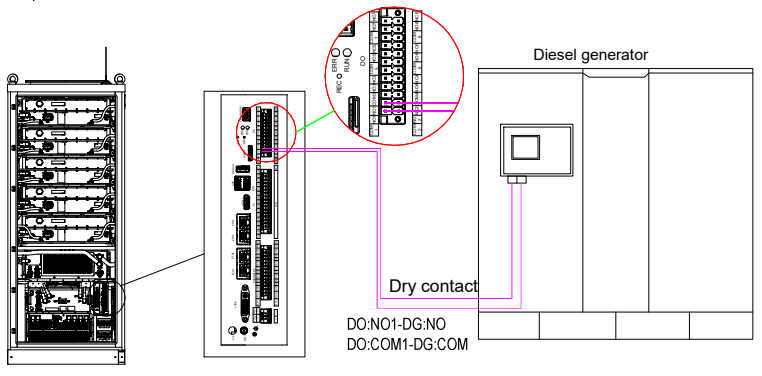

4.5 System cabinet to STS cabinet communication cable connection

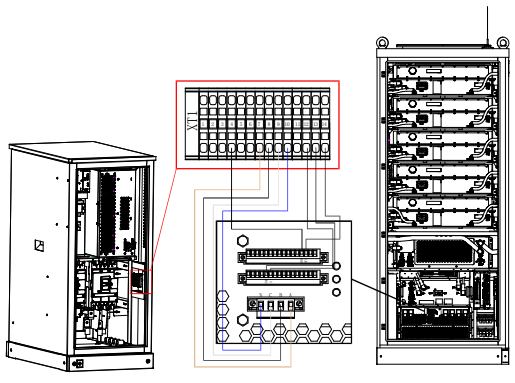

PCS:COM-XT1:4B
PCS:STS-XT1:14B
PCS:I3_COM-XT1:12B
PCS:I3-XT1:13B
PCS:A-XT1:7B
PCS:B-XT1:8B
PCS:C-XT1:9B
PCS:N-XT1:10B

Note:the cabling method for single system and parallel systems is the same.

4.8 Load side connection

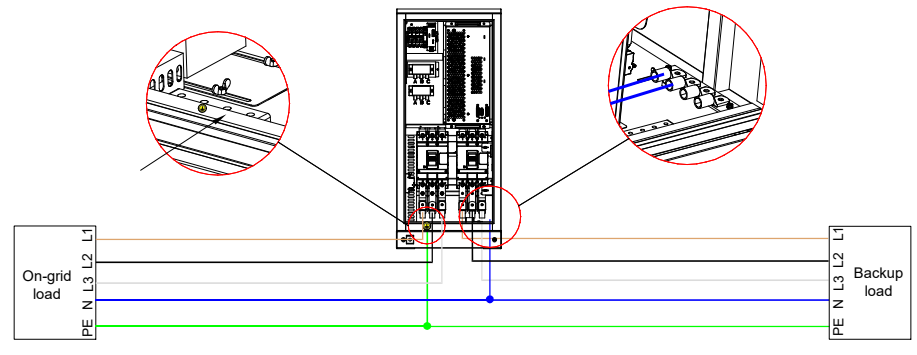

4.9 MSD Installation steps demonstration

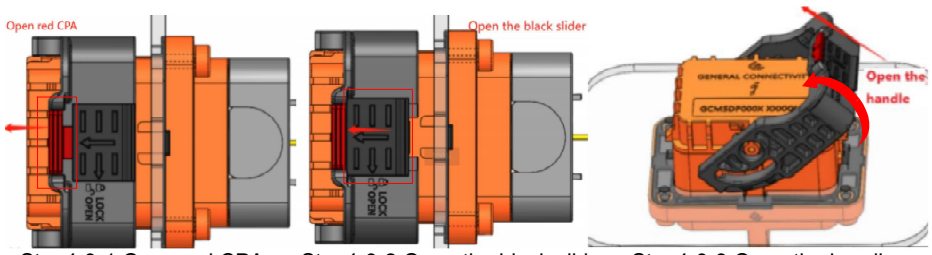

Step4-9-1:Open red CPA Step4-9-2:Open the black slider Step4-9-3:Open the handle

Completing the above steps indicates that the MSD unlock is complete.

4.10 MSD Installation

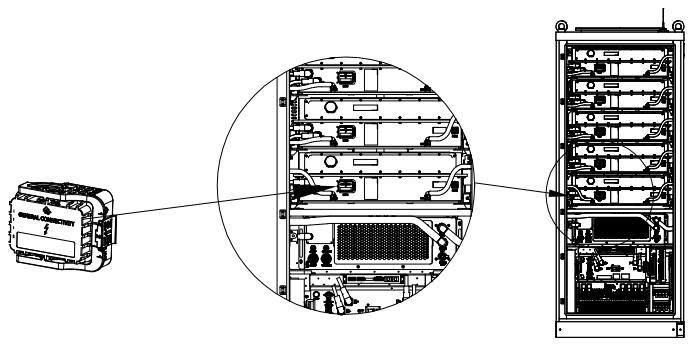

Step4-10-1:Mount the MSD onto the battery, then reverse the procedures from Step 4-9-3 to Step 4-9-1 to secure the MSD(The operation method is also opposite).

4.11 EMS reserved external interface

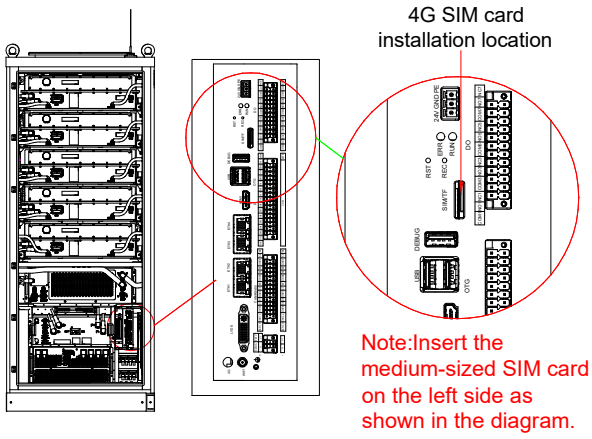

Note:Insert the medium-sized SIM card on the left side as shown in the diagram.

Dual Power	DI:DI1-ATS main circuit signal-NO DI:COM-ATS main circuit signal-COM DI:DI2-ATS Standby circuit signal-NO DI:COM-ATS Standby circuit signal-COM
RRCR	DI:DI3-RRCR-K1+ DI:COM-RRCR-K1- DI:DI4-RRCR-K2+ DI:COM-RRCR-K2- DI:DI5-RRCR-K3+ DI:COM-RRCR-K3- DI:DI6-RRCR-K4+ DI:COM-RRCR-K4-
14a EnWG	DI:DI7-Limited power:NO DI:COM-Limited power:COM DI:DI8-Unlimited power:NO DI:COM:-Unlimited power:COM
Load Classification	DO:NO2:NO-Load1+ DO:COM2-Load1- DO:NO3-Load2+ DO:COM3-Load2-
PV INV Communication	485A4：PV INV Communication 485A 485B4：PV INV Communication 485B

5. Commissioning

5.1 Power on the system

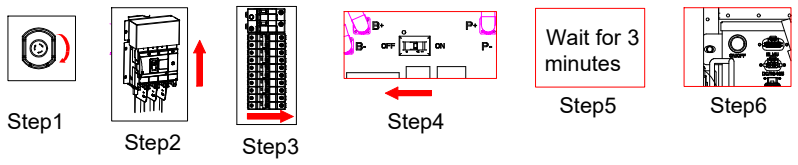

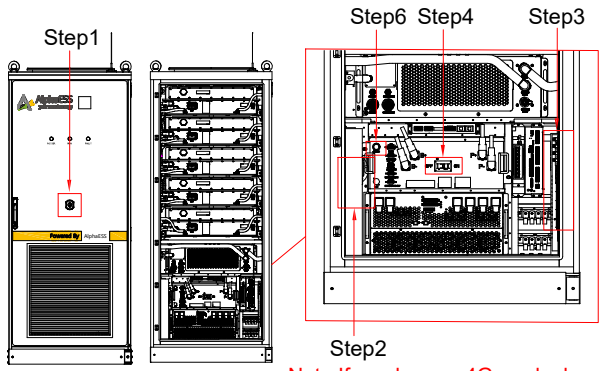

Step1：Rotate the EPO button to reset it .
Step2：Turn on the AC molded case circuit breaker.
Step3：Turn on the Auxiliary circuit breakers.
Step4：Turn on the molded case circuit breaker of the HV-Box.
Step5：Wait for 3 minutes. After the HV- Box relay is closed (you will hear a click when the relay closes), proceed with the operations in Step 6.
Step6：Press the auxiliary button once of the HV-Box.
Step7：Boot and run using Alpha Cloud or the embedded Web-enabled.

Note:If you have a 4G card, please insert it before starting EMS, and each time you insert a 4G card, EMS needs to be power off and restarted.

5.2 Power off the system

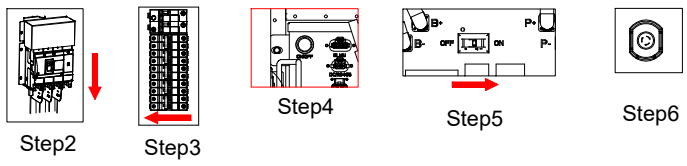

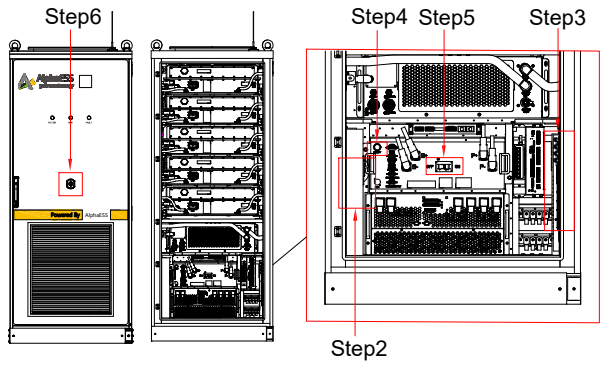

Step1：Perform shutdown via Alpha Cloud or the embedded Web-enabled operating system
Step2：Turn off the AC molded case circuit breaker .
Step3：Turn off the Auxiliary circuit breakers.
Step4：Push off the auxiliary button of the HV-Box.
Step5：Turn off molded case circuit breaker of the HV-Box.
Step6：Press the EPO once.

6. For more information, please download System User Manual and System Installation Manual

System Installation Manual

System User Manual

Alpha C&I Cloud